WATER FALL Cascade spout with individual jets for wall mounting - Dark Chrome

IMO

13 425 979

- 22mm projection
- PEARLSTREAM
- plate 240 mm x 60 mm
- connection 1/2", for shortening
- plug-link mounting
- Max. flow rate 9.5 l/min (at 3 bar)

Fits: IMO, LULU, MADISON, MEM, TARA, CL.1, LISSÉ, VAIA, META, CYO

Dark Chrome	13 425 979-19
Chrome	13 425 979-00
Brushed Platinum	13 425 979-06
Platinum	13 425 979-08
Light Gold	13 425 979-26
Brushed Light Gold	13 425 979-27
Brushed Durabrass (23kt Gold)	13 425 979-28
Matte Black	13 425 979-33
Brushed Bronze	13 425 979-42
Brushed Champagne (22kt Gold)	13 425 979-46
Champagne (22kt Gold)	13 425 979-47
Brushed Chrome	13 425 979-93
Brushed Dark Platinum	13 425 979-99

Recommended miscellaneous

Concealed wall elbow - 35 085 970 90
- max. recess depth mm
- min. recess depth mm

Recommended miscellaneous

Concealed wall elbow - 35 085 970 90
- max. recess depth mm
- min. recess depth mm

WATER FALL Cascade spout with individual jets for wall mounting - Dark Chrome

IMO

13 425 979
mm [inches]

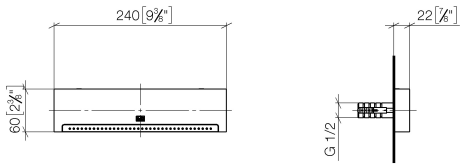

Flow rate chart

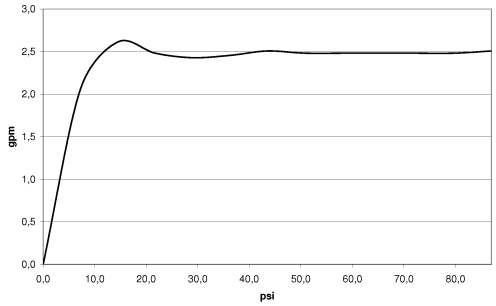

Trajectory diagram

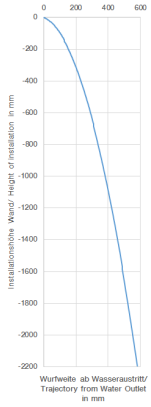

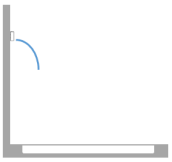

Codes & Standards

DIN 4109	ISO 3822	Ü-Zeichen

13 425 979

Certificates

LGA_19

WATER FALL Cascade spout with individual jets for wall mounting - Dark Chrome

IMO
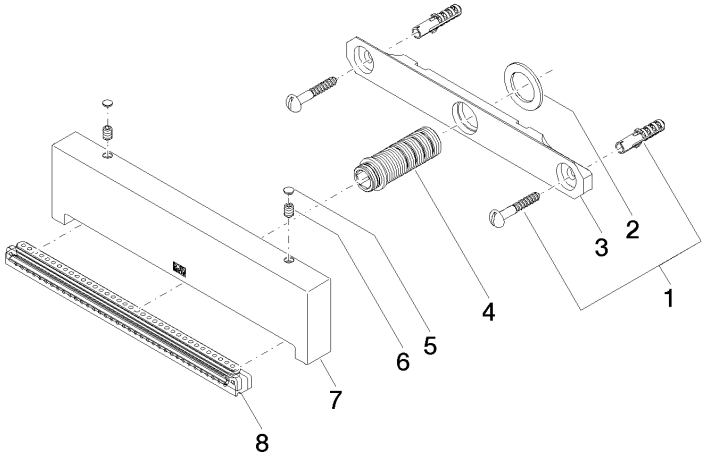
13 425 979